AVANTIME

2 Transmission

20 CLUTCH

21 MANUAL GEARBOX

29 DRIVESHAFTS

This document refers to the specifications for the **AVANTIME**. For all information on sections in common with the **ESPACE**, refer to Workshop Repair Manual 315.

DE0 T

77 11 304 542 **SEPTEMBER 2001** **EDITION ANGLAISE**

"The repair methods given by the manufacturer in this document are based on the technical specifications current when it was prepared.

The methods may be modified as a result of changes introduced by the manufacturer in the production of the various component units and accessories from which his vehicles are constructed."

Transmission

Contents

SPECIAL TOOLING REQUIRED		
Mot.	1431	Immobilising tool
Emb.	1604	Clutch refitting tool
EQUIPMENT REQUIRED		
Strut type engine mounting		
Hydraulic jack		

TIGHTENING TORQUES (in daNm)	
Clutch mounting bolt on the crankshaft	3 + 60°
Mechanism mounting bolt on the clutch	1.2
Driveshaft gaiter bolt	2.4
Shock absorber base bolt	20
Front hub nut	28
Gearbox edge bolt and starter	5
Nut around the gearbox	5
Gearbox mounting bolt on gearbox	10.5
Wheel bolt	11

REMOVAL

Replacement of the L7X PK6 engine and gearbox assembly wear compensation clutch system takes place after removal of the gearbox.

Lock in rotation the crankshaft with the flywheel locking tool **Mot. 1431**.

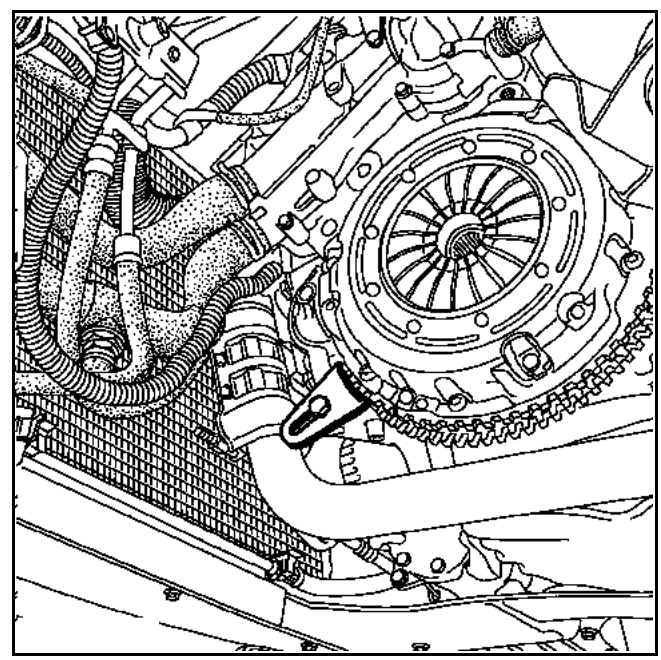

Removal of the whole clutch system:

Remove the mechanism (see next page).

Remove the six clutch mounting bolts on the crankshaft.

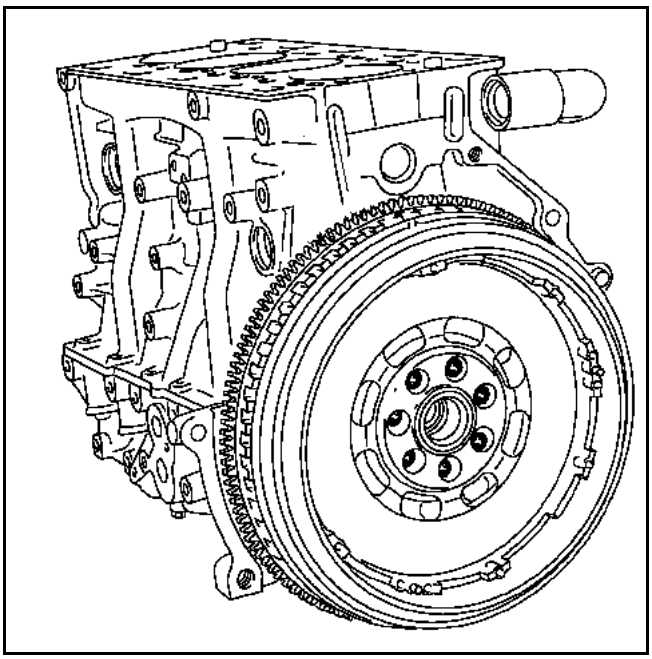

REFITTING

IMPORTANT: clean the mounting holes in the crankshaft and the system bearing face.

The friction of the whole new clutch is wedged to let pass a bush and the mounting bolts on the crankshaft. There is no need, therefore, to remove the friction.

IMPORTANT: the holes are not equidistant; therefore there is only one position for replacing the clutch on the crankshaft.

Tightening torque: **3 daNm + 60**°.

Removal of the mechanism and the friction:

REMOVAL

Remove the twelve mechanism mounting bolts.

Take out the mechanism and the friction.

REFITTING

Clean the inside of the plate fully. Check that there are no faults before refitting: excessive or uneven wear, deep grooves, etc...

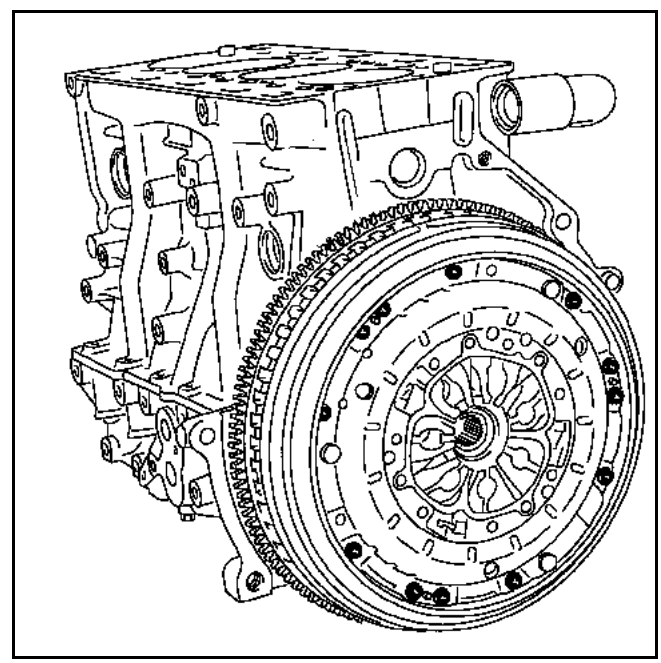

Truss the new mechanism in position using tool **Emb. 1604** (several turns of the wheelbrace).

Do not insert the friction.

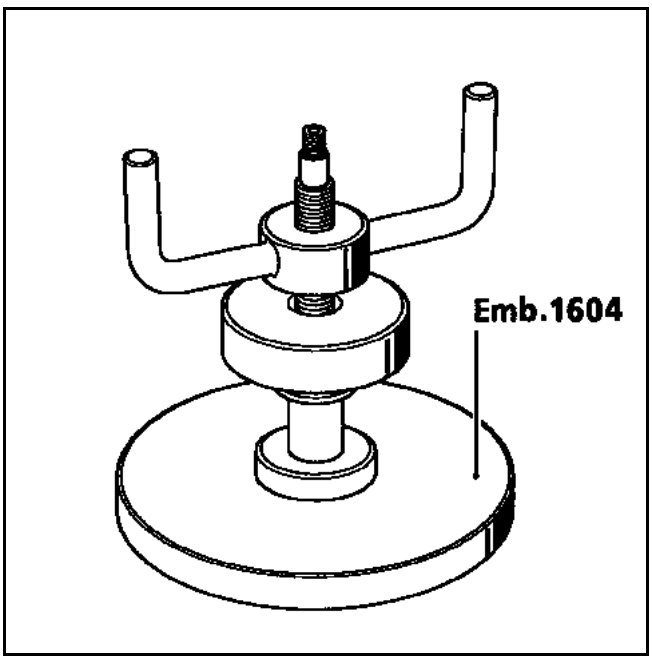

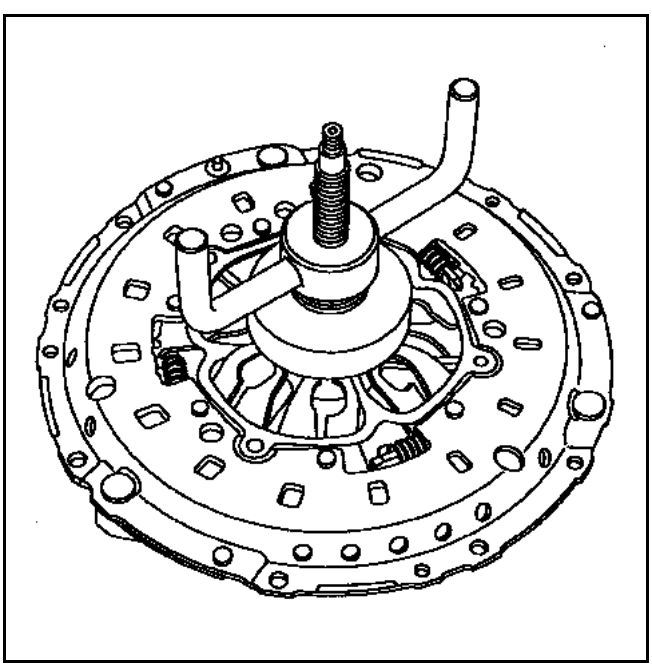

Using a screwdriver and with the palm of your hand, tap gently on the valve rockers working on the three systems in turn to distribute the trussing.

When the springs are in joined spirals, remove the tool and take care not to knock the mechanism which may cause it to disarm.

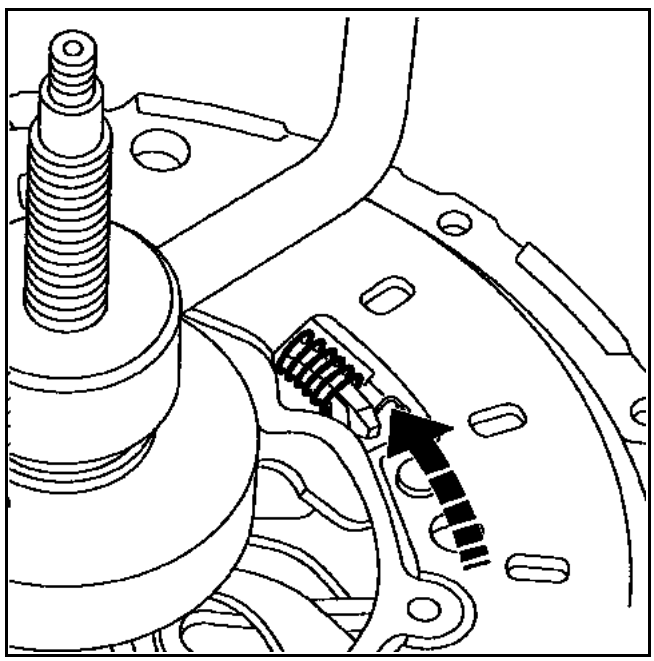

Fit the disc (offset (A) of the hub flywheel side).

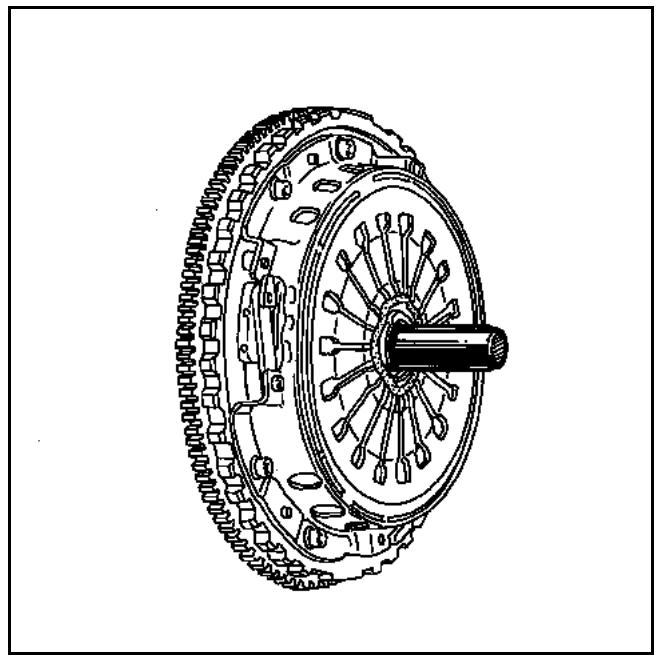

Use the clutch centring tool supplied in the kit.

Refit the twelve mounting bolts rotating the tightening in a star and lock the bolts.

Torque tighten the mechanism mounting bolts:
1.2 daNm.

Remove the flywheel locking tool **Mot. 1431** and the clutch centring device.

After refitting the gearbox, operate the clutch pedal several times to find a normal declutching.

Suffix	Vehicle type	Final drive ratio	Speedometer gear	1st	2nd	3rd	4th	5th	Reverse gear
PK6									
012	DE0 T	17/64	None	11/43	19/40	29/43	39/43	39/35	27/47

CAPACITY (in litres)

New gearbox:	**2.35** ± **0.15** litres
If changing the oil, refill	**2.2** ± **0.15** litres

VISCOSITY GRADE

TEXACO ETL 8275

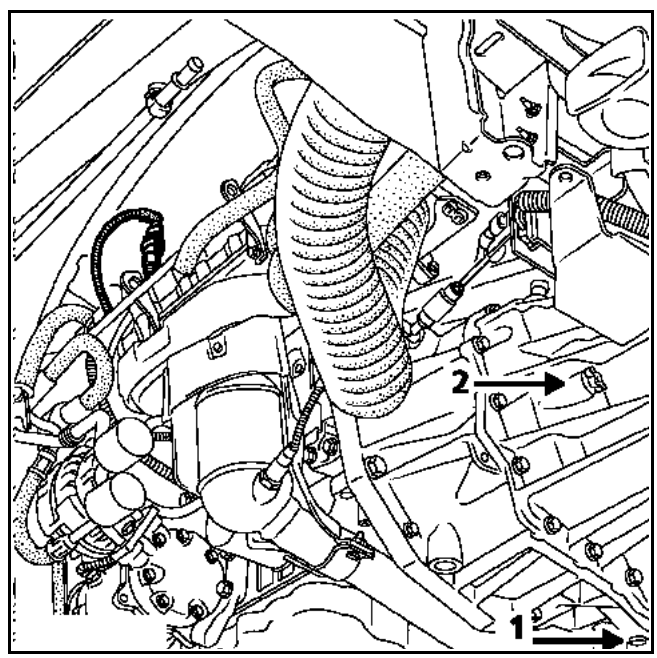

1 Drain plug

2 Filler plug

WARNING: the filler plug (2) is not an opening that controls the level by overflowing, the incline of the gearbox changes with use in different vehicles.
In the event of a leak, drain and refill **2.2** ± **0.15** litres in the gearbox.

EQUIPMENT REQUIRED
Strut type engine mounting
Hydraulic jack

TIGHTENING TORQUES (in daNm)	
Driveshaft gaiter bolt	2.4
Shock absorber base bolt	20
Front hub nut	28
Gearbox edge and starter motor bolt	5
Nut around the gearbox	5
Gearbox mounting bolt on gearbox	10.5
Wheel bolt	11

CONSUMABLES
MOLYKOTE BR2: Splines of the right-hand sunwheel and relay-bearing exterior race

REMOVAL

Put the car on a two-post lift.

Disconnect and remove the battery.

Remove:
– the front wheels,
– the engine undertray,
– the left hand wheel arch protector.

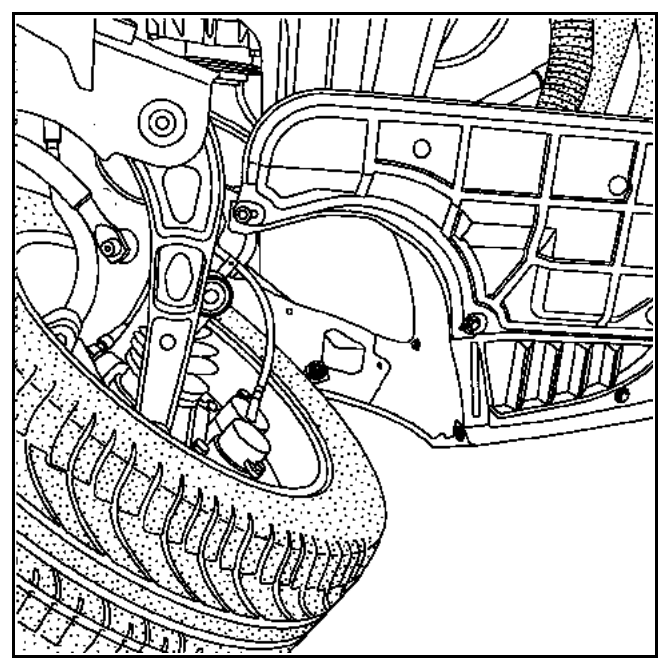

Drain the gearbox.

Refit the drain plug with a new seal.

TO REMOVE THE DRIVESHAFTS:

Right-hand side of the vehicle

Remove:
– the two mounting bolts (1) at the base of the shock absorber on the stub-axle,

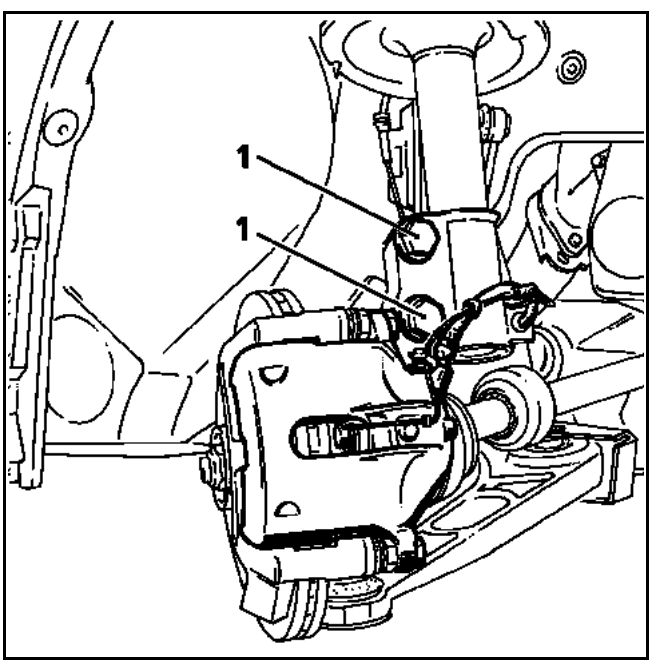

– the two transmission flange mounting bolts on the relay bearing.

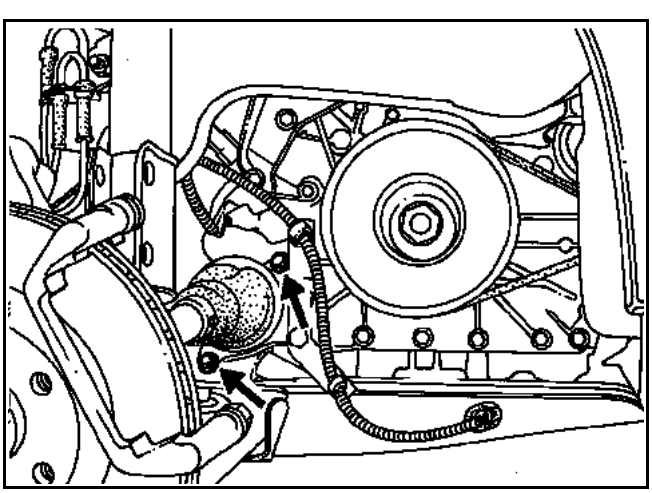

Unfasten the wear warning strip wire from the brake pads.

Disconnect the ABS target sensor.

Push away the driveshafts.

WARNING: these driveshafts are not cemented and should not be on refitting.

Tilt the stub-axle carrier to remove the splined shaft and remove the driveshaft.

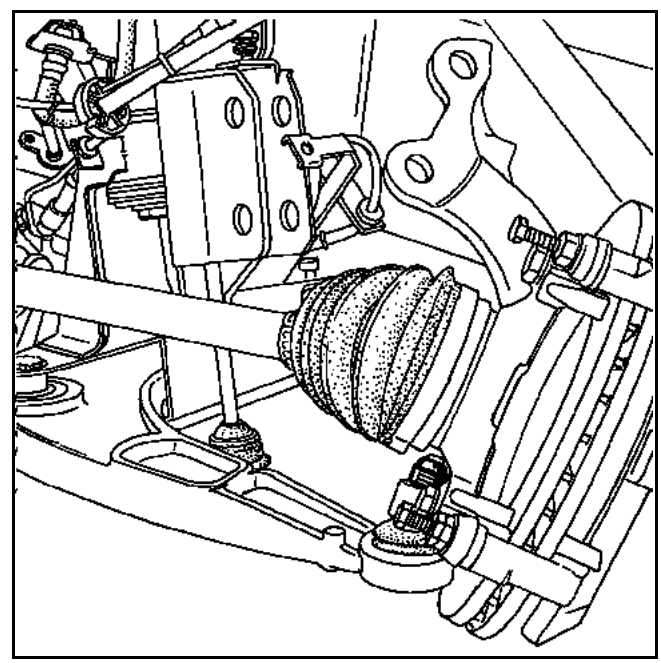

Take care to protect the gaiters.

Left-hand side of the vehicle

Carry out the same procedure for the right-hand side, except:
Remove the three driveshaft gaiter bolts.

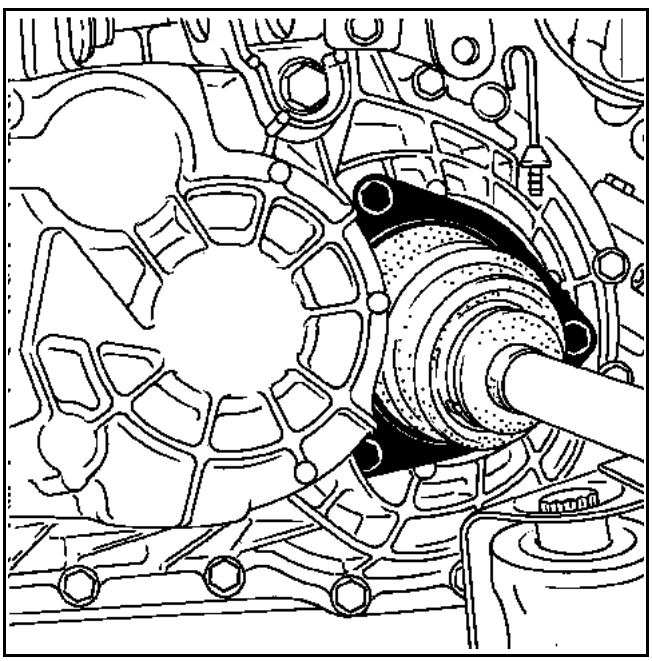

Remove the driveshaft; take care of the gaiters.

In the engine compartment:

Remove:
– the air filter unit,
– the air filter mounting,
– the flexible air inlet duct (2).

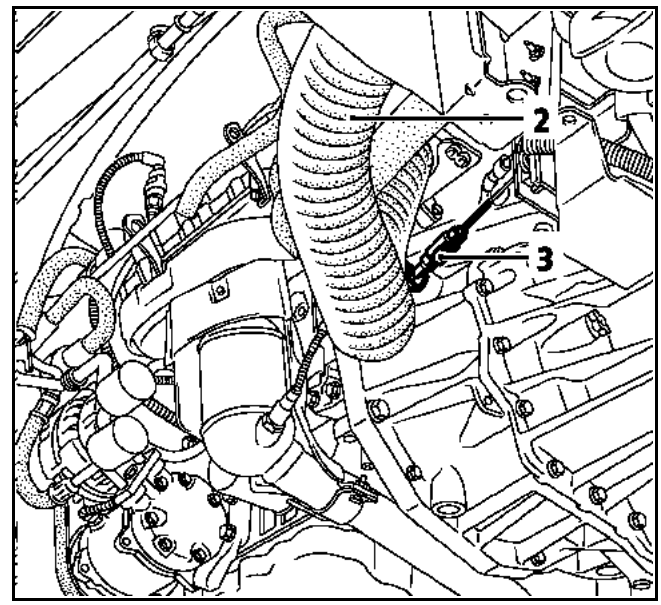

If necessary, fit the pedal press on the clutch pedal, lightly depressed.

Disconnect the valve (3) from the clutch slave cylinder; be ready for the brake fluid running out.

Unclip the two passage (4) and selection (5) cables from the gearbox by pressing on their central unlocking button.

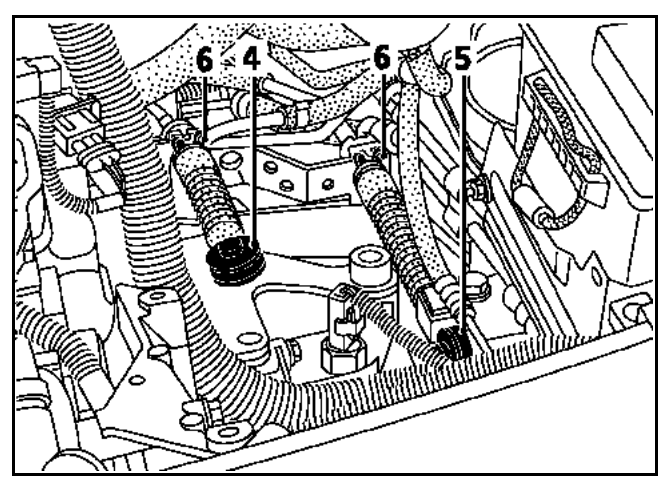

With a pair of pliers, unfasten the retaining clips on the sleeve stops (6), pinch them and pull upwards.

Disconnect and remove the TDC sensor (7).

Separate the electrical sleeve from the retaining clip (8). Temporarily fit this sleeve to the rear to avoid jamming it when fitting the gearbox.

Remove the two bolts and the two gearbox housing upper mounting studs (A) on the engine.

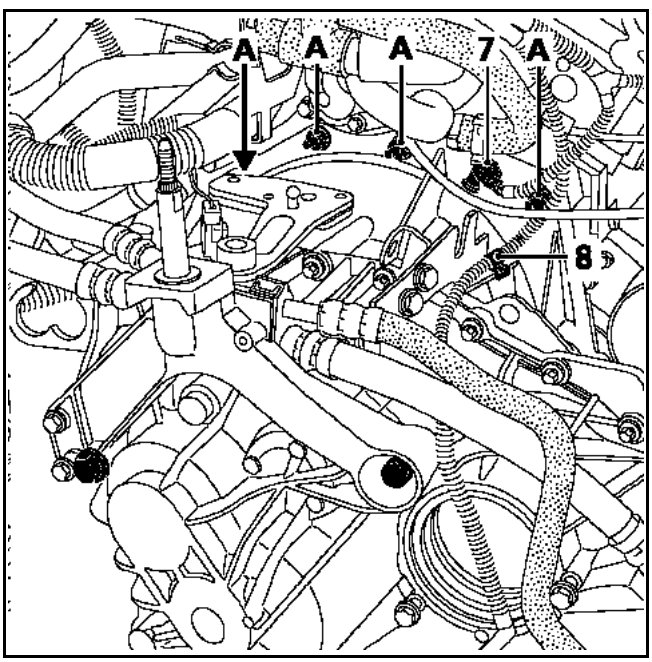

Under the vehicle:

Put a stay fitted with a rubber base under the engine oil housing (on the clutch housing side) and a component jack under the gearbox.

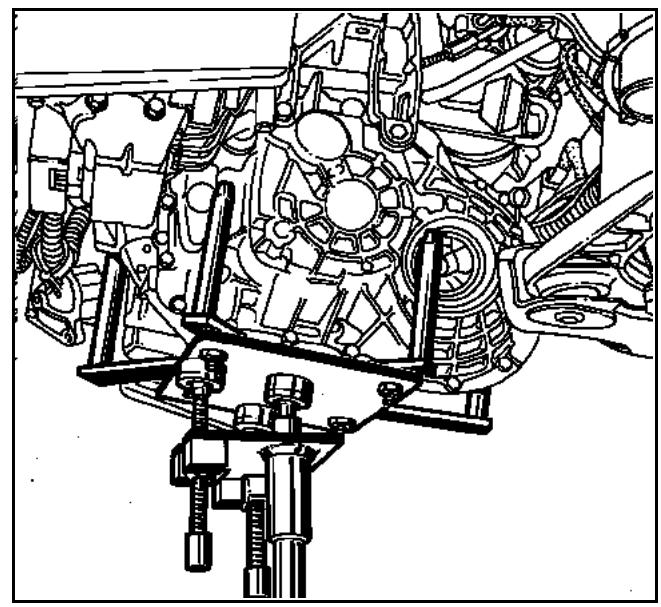

Remove:
– the catalytic converter connection clip,

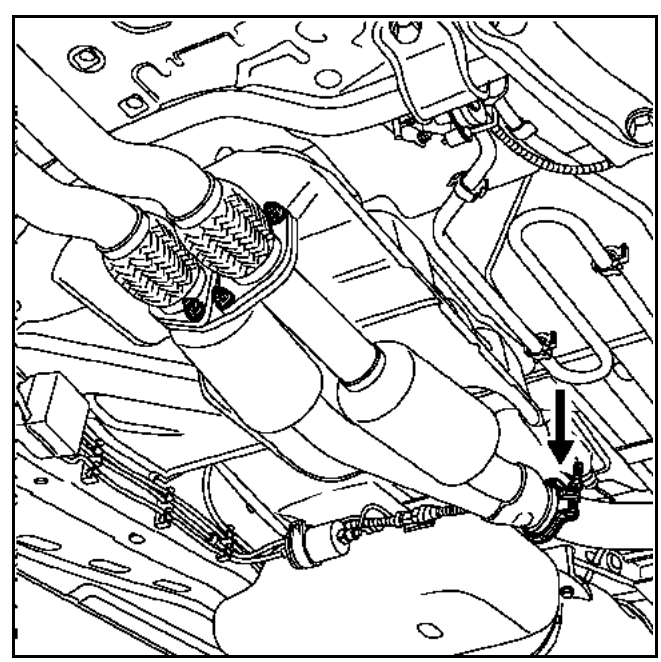

– the oxygen sensor (9) to make removing/refitting the gearbox easier.

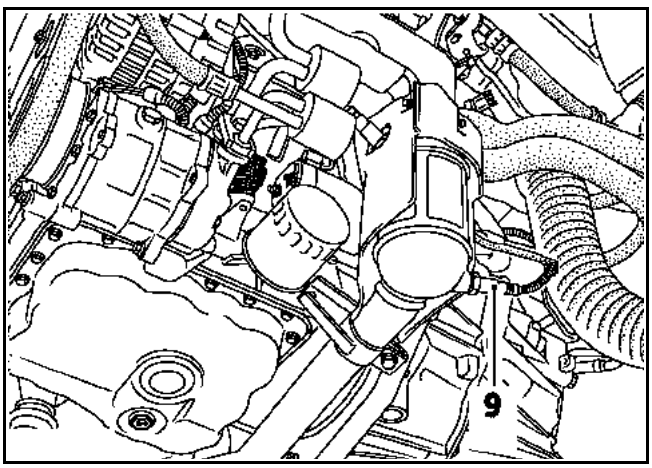

Remove the two bolts and the two retaining fork mounting studs (10) on the gearbox.

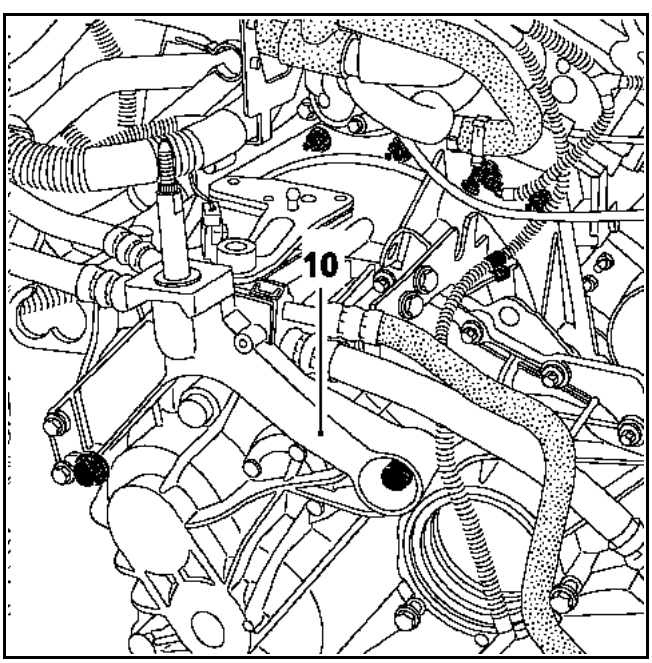

Carefully lower the engine and gearbox assembly by lifting the vehicle.

IMPORTANT: watch the angle to avoid colliding with the cooling unit or the right-hand section under the side member. Never leave the engine suspended without a support stay because it may damage the engine suspensions.

Remove the last two mounting bolts on the engine.

To facilitate the removal of the gearbox, pivot it round the shifter shaft by lifting the final drive upwards.

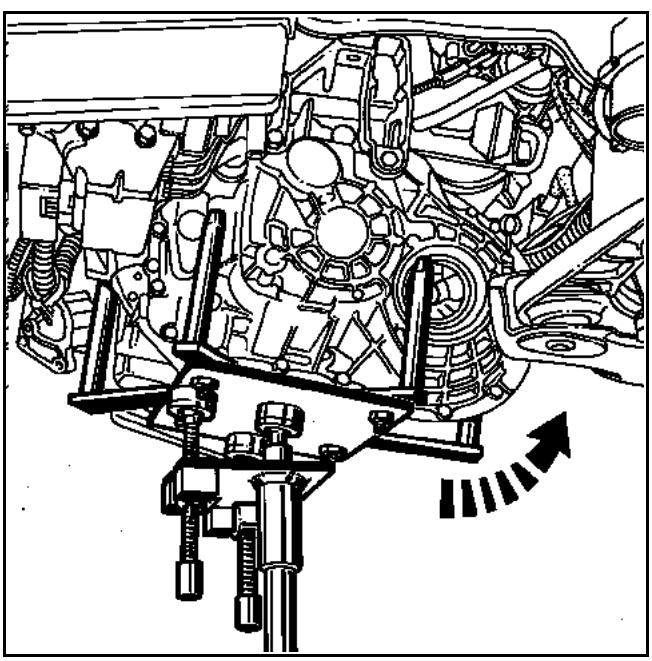

REFITTING

Proceed in the reverse order to removal.

Adjusting the gear shift:

Unclip the front central console trim (7) and pull it upwards by the rear section, then release it to the rear.

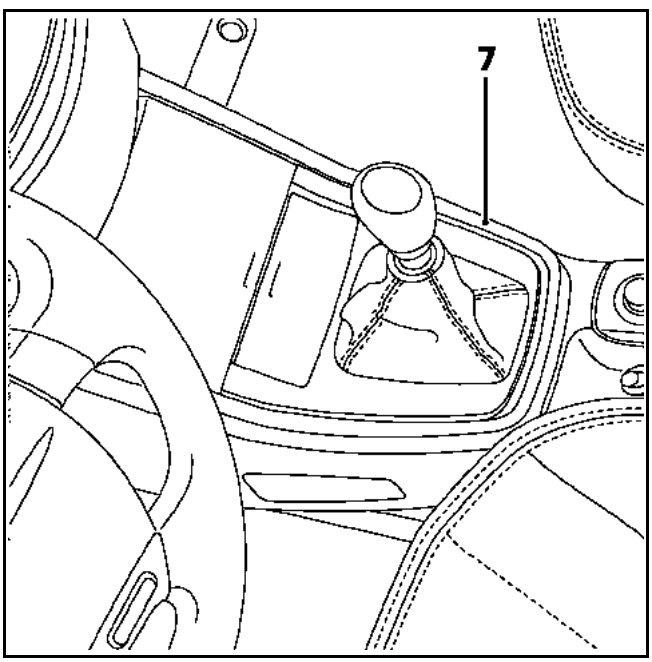

Remove the gear lever gaiter and its base.

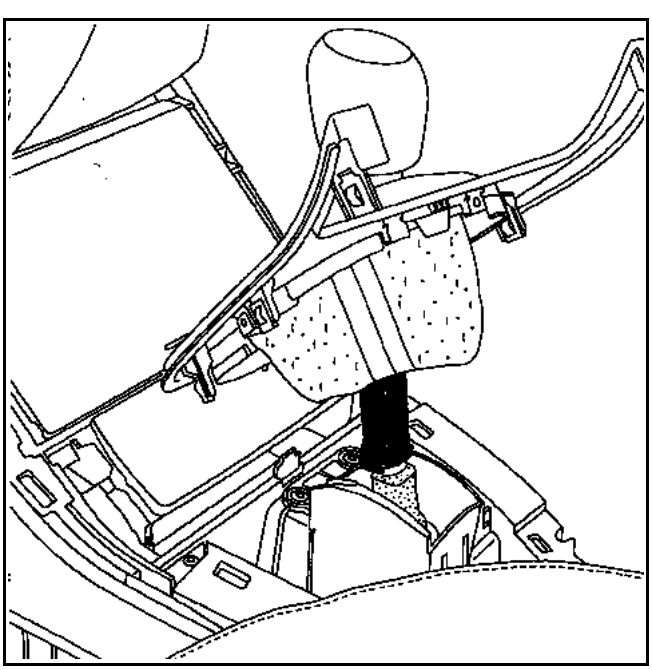

Fix the sleeve stops (3) and (4) with their clip and refit ball joint (1) only.
WARNING: do not fit ball joint (2).

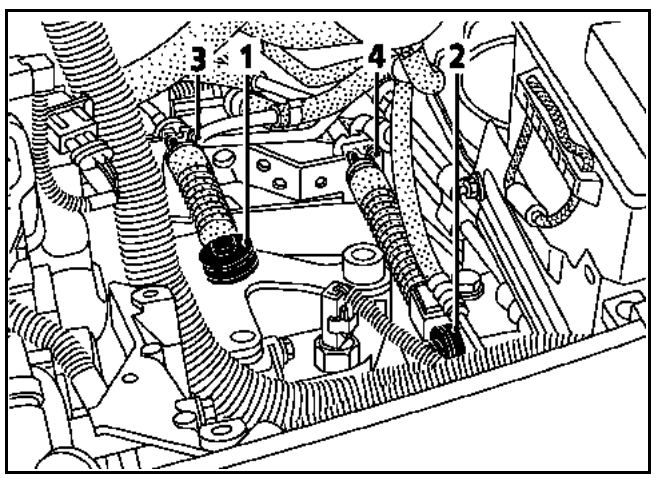

Check that the gearbox selection lever (12) positions naturally in neutral (approximately vertical).

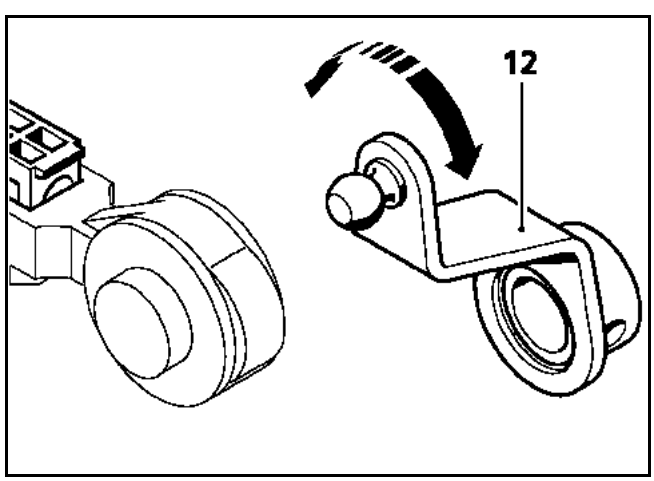

Clip the ball joint on the selector lever without locking the cable/end-piece connection system.

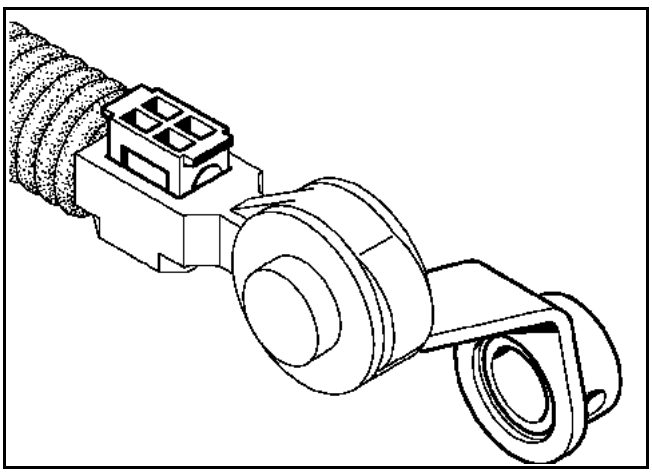

Put the lever adjustment jig (13) on the control lever, and press on the lever trim housing.

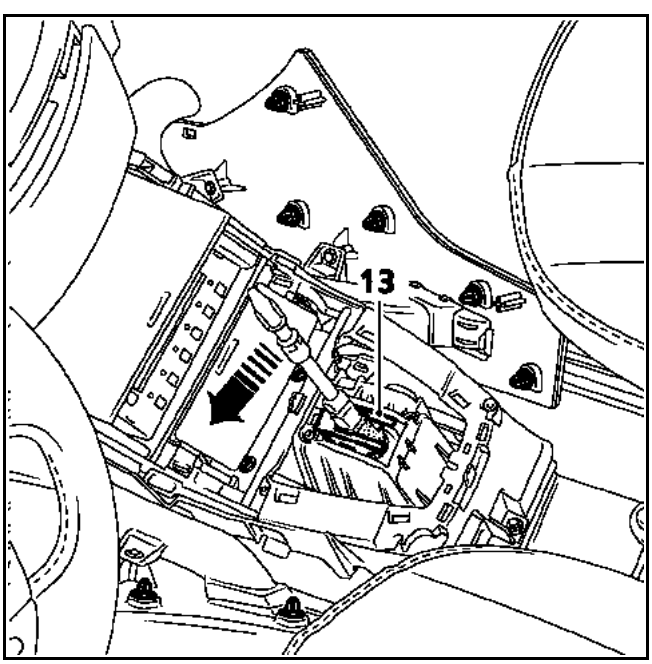

In the engine compartment, lock the end-piece/cable connection system in this position at the same time resting on and below the moving valve rocker, to balance the effort and avoid bending the cable.

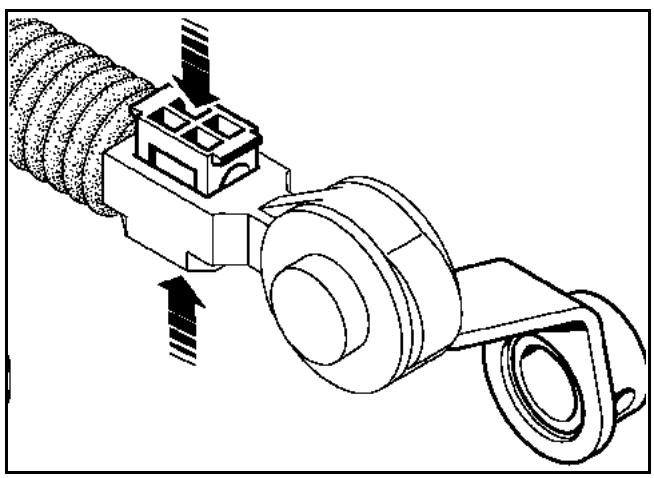

Remove the adjustment jig.

Check that the gears change correctly.

Refitting is the reverse of removal.

The side driveshafts of the **AVANTIME** are the same as on the latest model of the **ESPACE**, they are no longer cemented and should not be cemented on refitting.

TIGHTENING TORQUES (in daNm)	
Driveshaft gaiter bolt	**2.4**
Shock absorber base bolt	**20**
Front hub nut	**28**
Wheel bolt	**11**

CONSUMABLES
MOLYKOTE BR2: Splines of the right-hand sunwheel and relay-bearing exterior race

REMOVAL

Put the car on a two-post lift.

Disconnect the battery.

Remove:
– the front wheels,
– the front wheel arch covers.

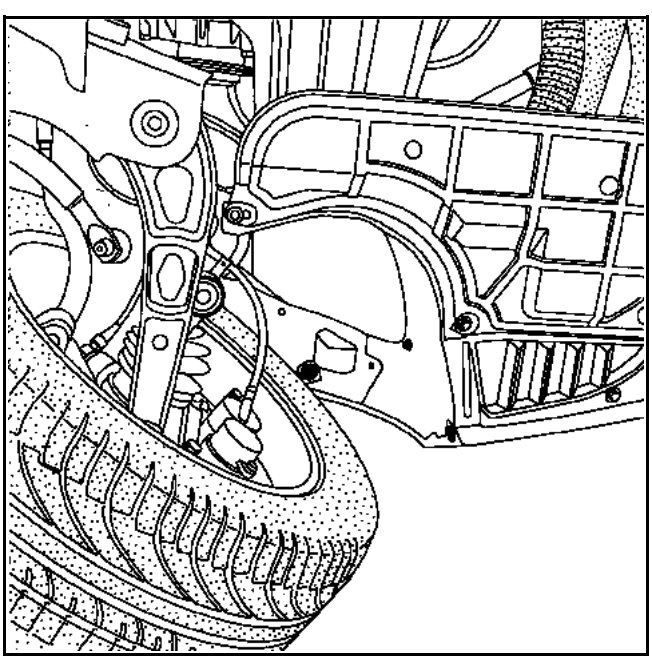

Drain the gearbox.

Refit the drain plug with a new seal.

Right-hand side of the vehicle

Remove:
– the two mounting bolts (1) at the base of the shock absorber on the stub-axle,

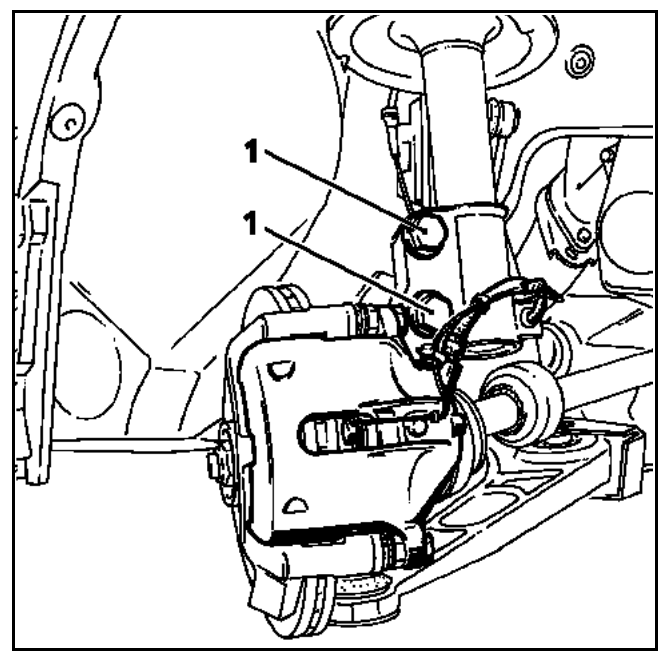

– the two transmission flange mounting bolts on the relay bearing.

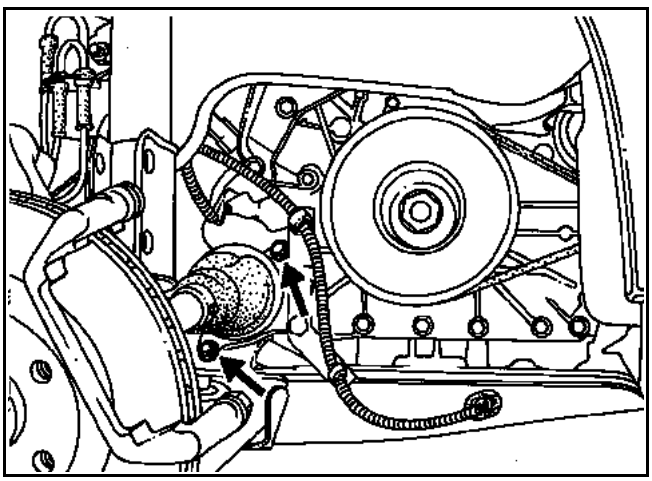

Unfasten the wear warning strip wire from the brake pads.

Disconnect the ABS target sensor.

Push away the driveshafts.

WARNING: these driveshafts are not cemented and should not be on refitting.

Tilt the stub-axle carrier to remove the splined shaft and remove the driveshaft.

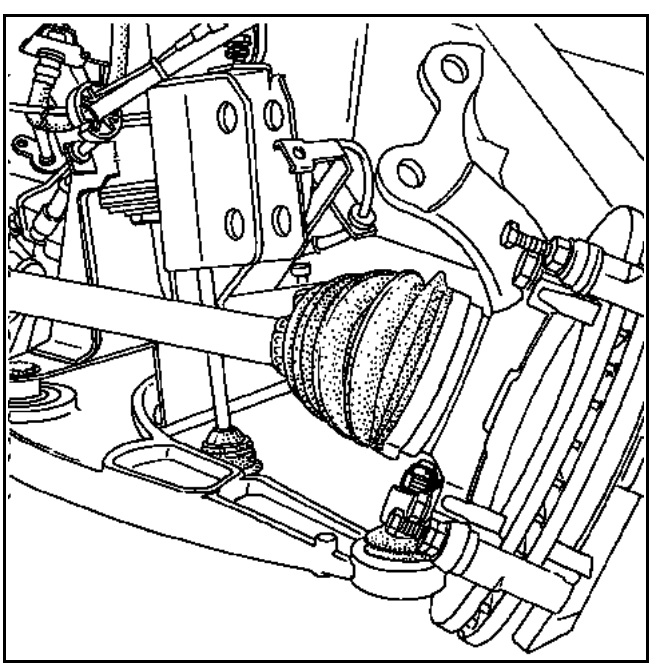

Take care to protect the gaiters.

Left-hand side of the vehicle

Carry out the same procedure for the right-hand side, except:
Remove the three driveshaft gaiter bolts.

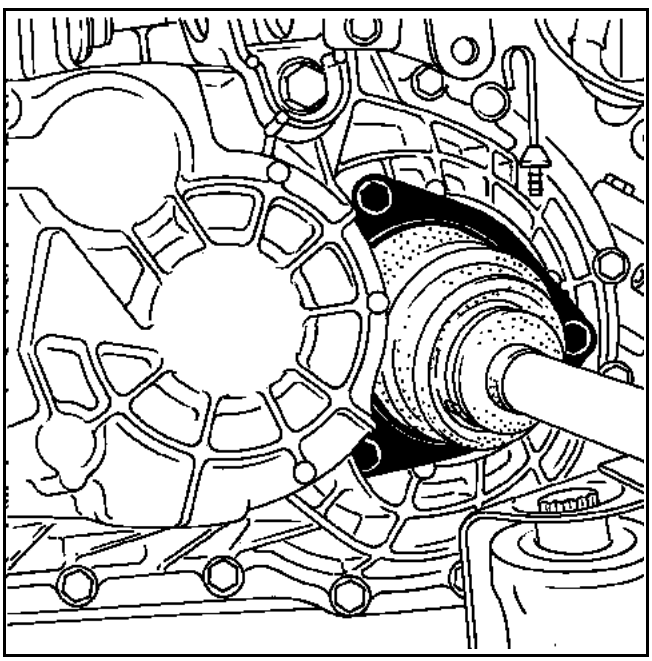

Remove the driveshaft; take care of the gaiters.

On refitting, tightening torque on the hub nut:
28 daNm.